Homework #3 of Introduction to VLSI Design

- 作業繳交截止日期: April 9, 2025, 23:59 (2 week)
  (上傳E3數位平台繳交)

  24 hours after the deadline: 20% penalty
  48 hours after the deadline: 50% penalty
  No submissions accepted after 48 hours
- 檔名：VLSI_HW3_學號.pdf (VLSI_HW3_112345678)
  請將檔案轉成PDF格式 (命名錯誤扣5分)

- HW 3.2, HW 3.3, HW 3.4 請命名為 ”學號_3.2.sv”, ”學號_3.3.sv”, ”學號_3.4.sv”
- 將3個*.sv檔壓縮成”學號.zip”上傳至E3平台
- 在HW 3.2, HW 3.3, HW 3.4的.sv檔中禁止使用 ”+, -, *, /” 運算符號
- 可以使用 ”&, |, ^, !” (bit AND, OR, XOR, NOT) 或是 “&&, ||, ~” (logic AND, OR, NOT)
- Module 的命名請按照規定的名稱，Port順序以及Port bit數

Assignment #3.11 **10%**

- Annotate the labels for the following layouts
  - word, bit, bit_b, N1,N2,N3,N4.P1.P2

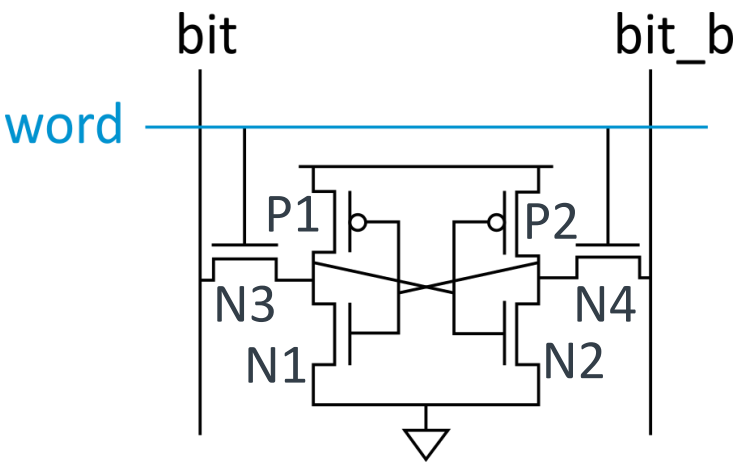

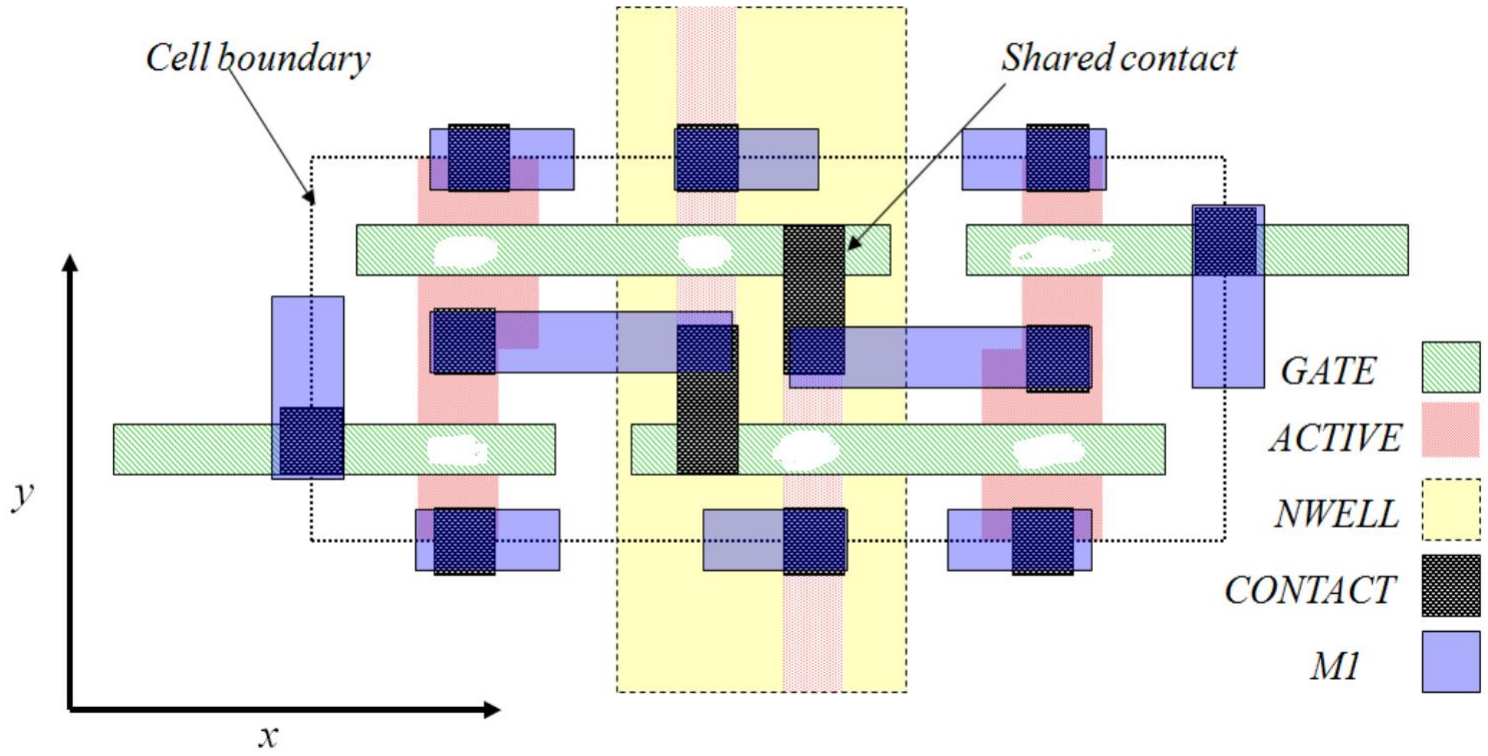

Homework #3.12 (Cont'd) **10%**

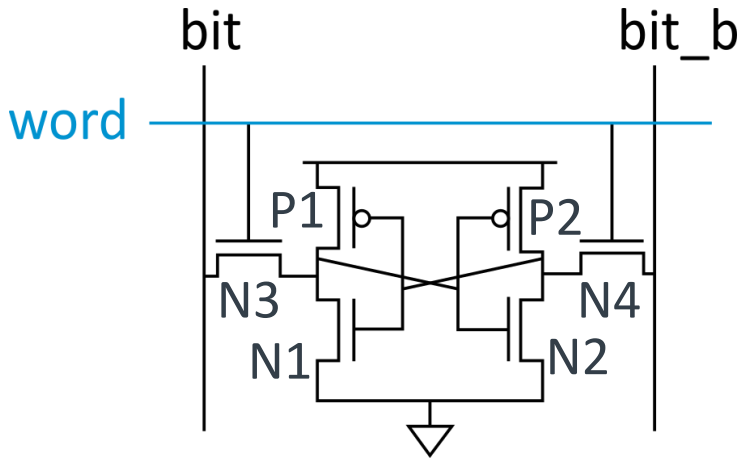

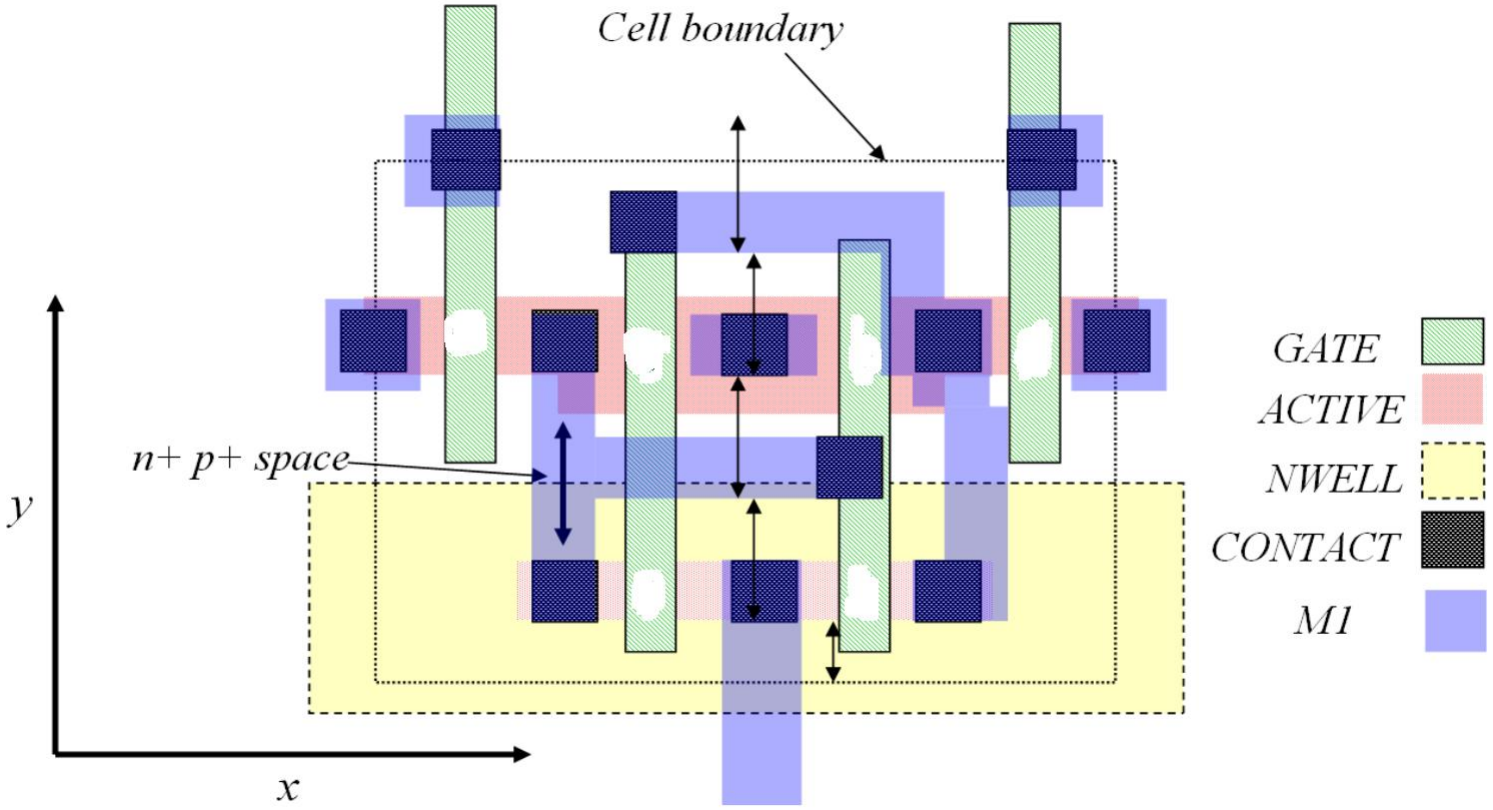

Homework #3.13 (Cont'd) **10%**

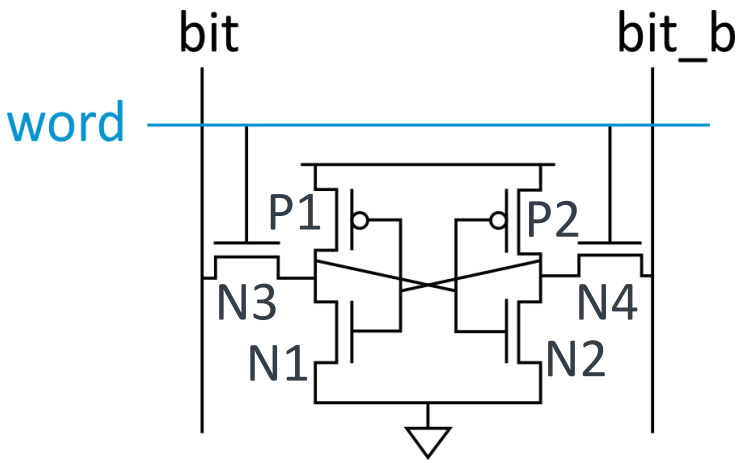

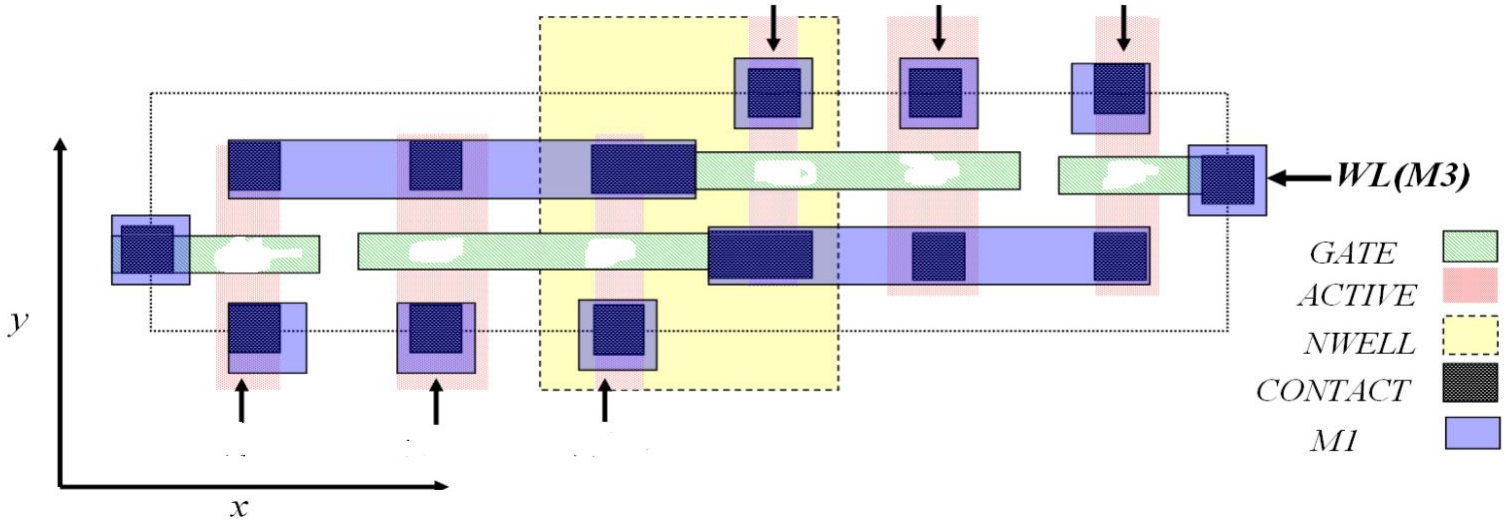

Assignment #3.2 **20%**

- Implement a 14-bit carry select adder with Verilog
- Module name:

```
module CSA_14 (
        output  logic [13:0] s_o,
        output  logic        c_o,
        input   logic [13:0] a_i,
        input   logic [13:0] b_i,
        input   logic        c_i
);
```

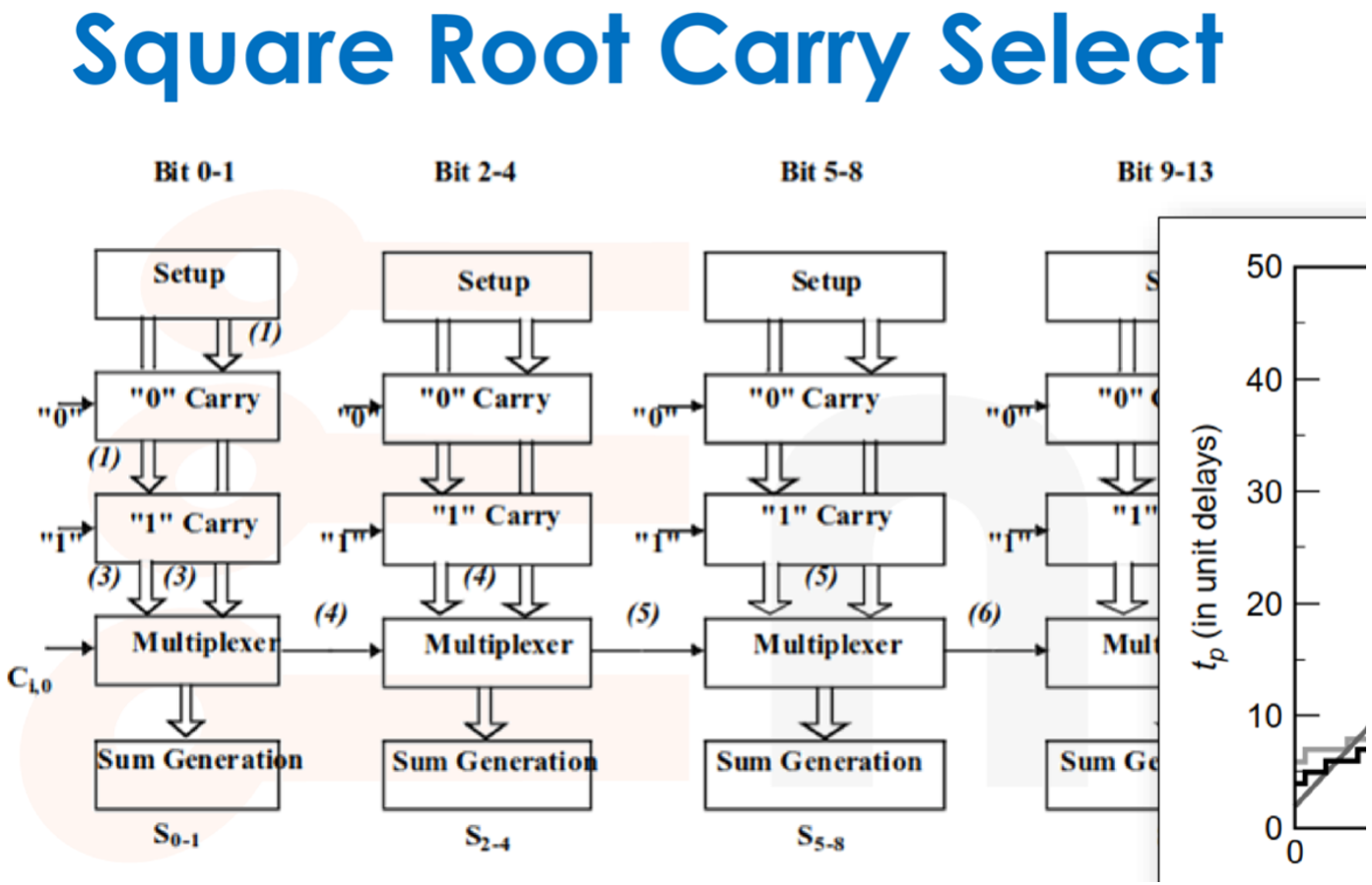

Assignment #3.3 **25%**

- Implement a 16-bit Brent-Kung tree adder with Verilog
- Module name:

```
module BKT_16 (
        output  logic [15:0] s_o,
        output  logic        c_o,
        input   logic [15:0] a_i,
        input   logic [15:0] b_i
);
```

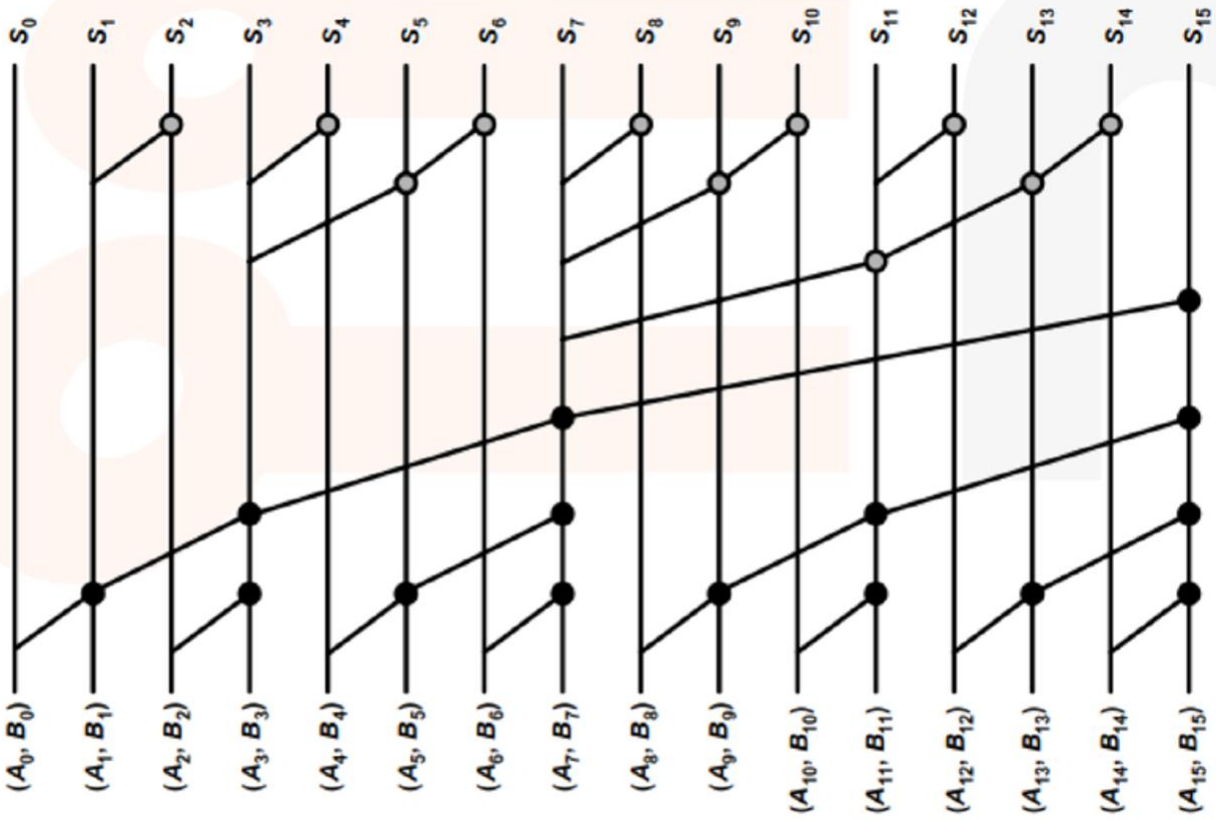

Brent-Kung Tree

Assignment #3.4 **25%**

- Implement a 9-bit by 7-bit Wallace tree multiplier with Verilog and please use the implementation of assignment #3.3 (brent-kung tree adder) as the last stage CLA
- Module name:

```
module Wallace_Tree_9X7 (
        output  logic [15:0] out,
        input   logic [ 8:0] a_i,
        input   logic [ 6:0] b_i
);
```

Reference

- EDA playground Examples
  - Ripple carry adder (https://edaplayground.com/x/YrzV)
  - Carry select adder (https://edaplayground.com/x/AtHz)
  - 4x4 Wallace-tree multiplier (https://edaplayground.com/x/WkNg)

Reference

- EDA playground UI

Run simulation

Save design

Testbench window

Design window

Simulator selection

Enable waveform viewer

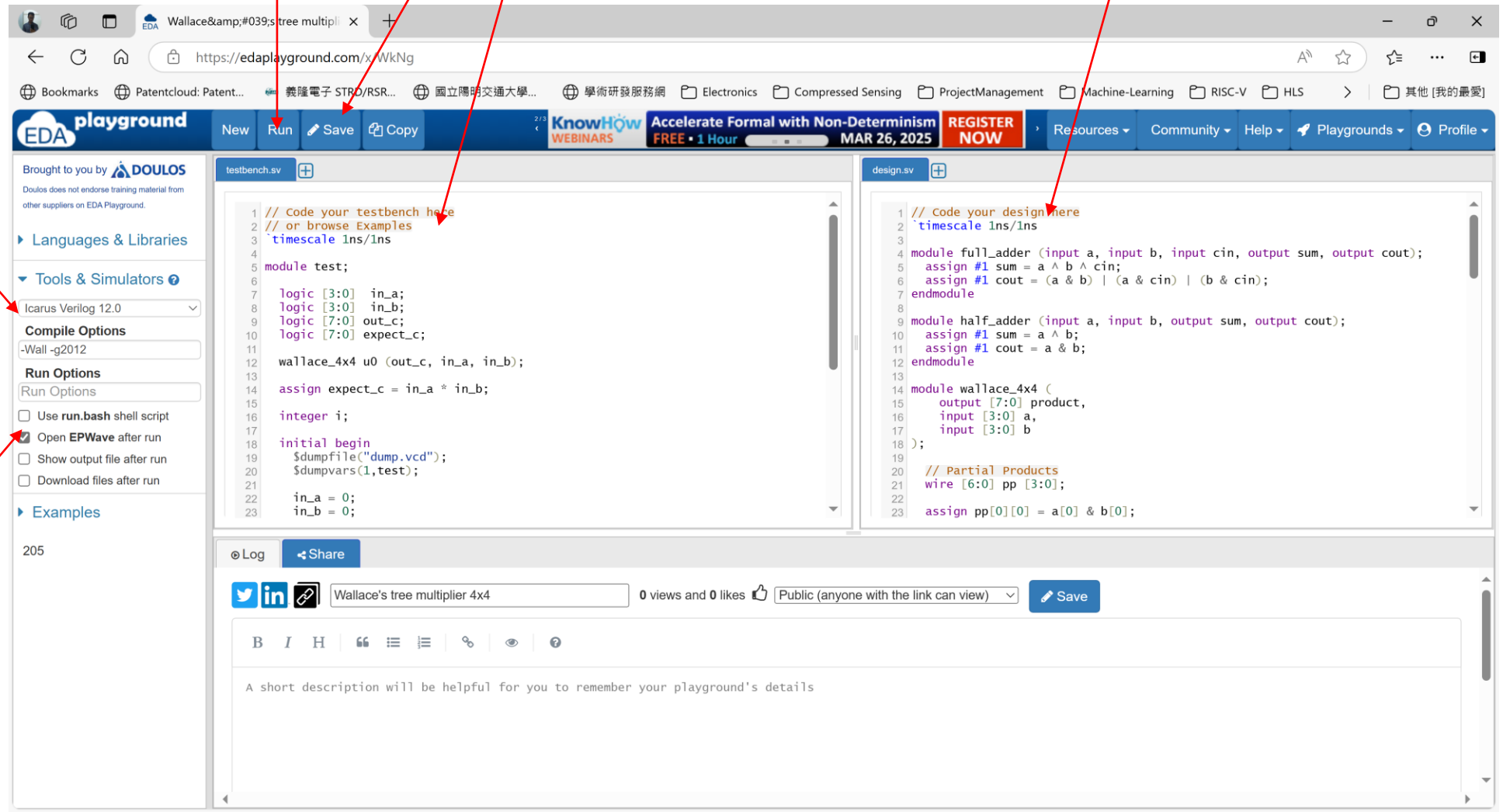

Reference

- Waveform viewer

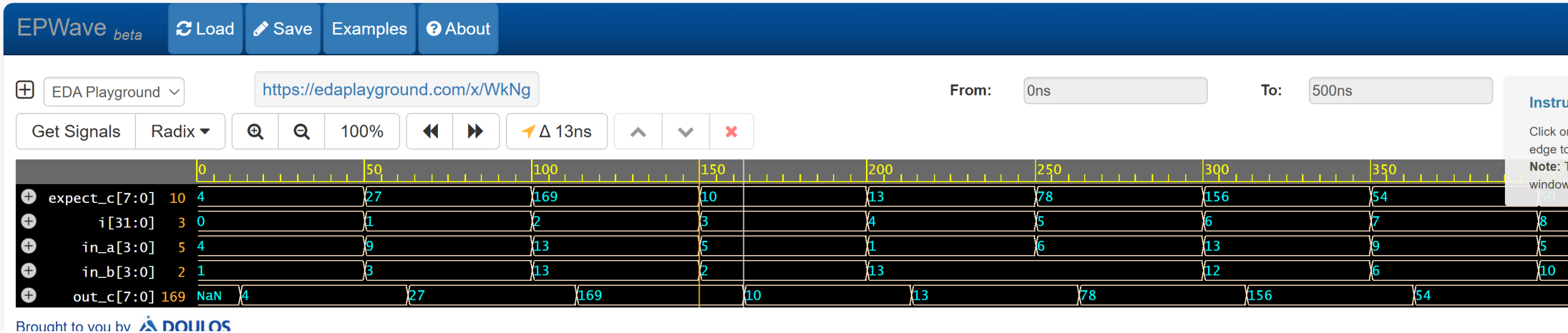

References

Time unit is 1ns

Time precision is also 1ns

```
`timescale 1ns/1ns
module test;
  logic [3:0]  in_a;
  logic [3:0]  in_b;
  logic [7:0] out_c;
  logic [7:0] expect_c;

  wallace_4x4 u0 (out_c, in_a, in_b);

  assign expect_c = in_a * in_b;

  integer i;
  initial begin
    $dumpfile("dump.vcd");
    $dumpvars(1,test);
    in_a = 0; in_b = 0;
    for (i=0; i<10; i=i+1) begin
      in_a = $random%16; in_b = $random%16;
      # 50;
      assert(out_c==expect_c) else begin
        $error("[FAIL] Output %d != Expect %d", out_c, expect_c);
        $finish;
      end
    end
    $display("All tests pass");
    $finish;
  end
endmodule
```

Signal declaration

Waveform control
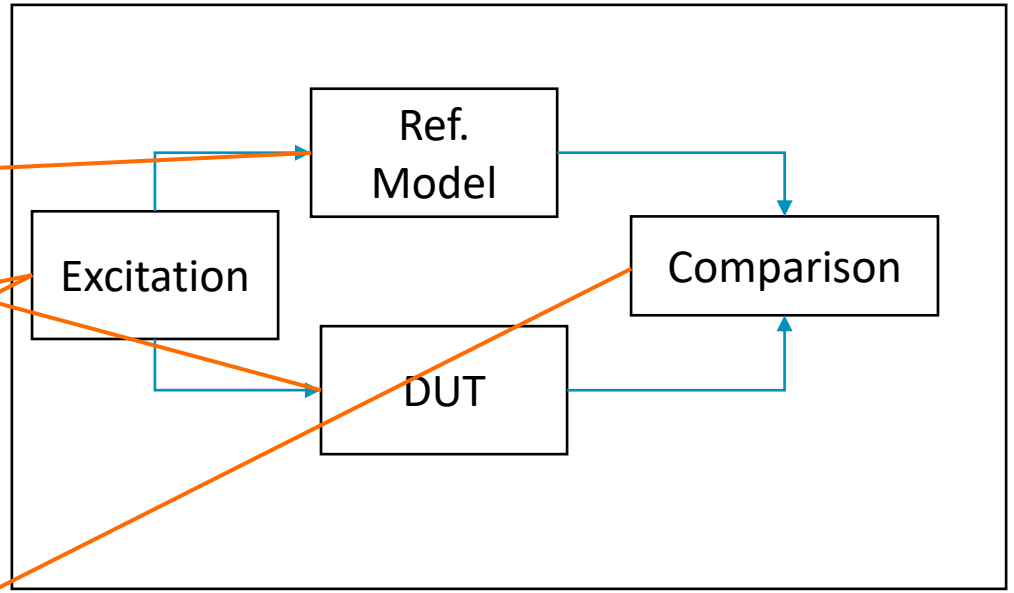
Wait for 50ns